STONE® LCD Wall & Ceiling Mount Bracket

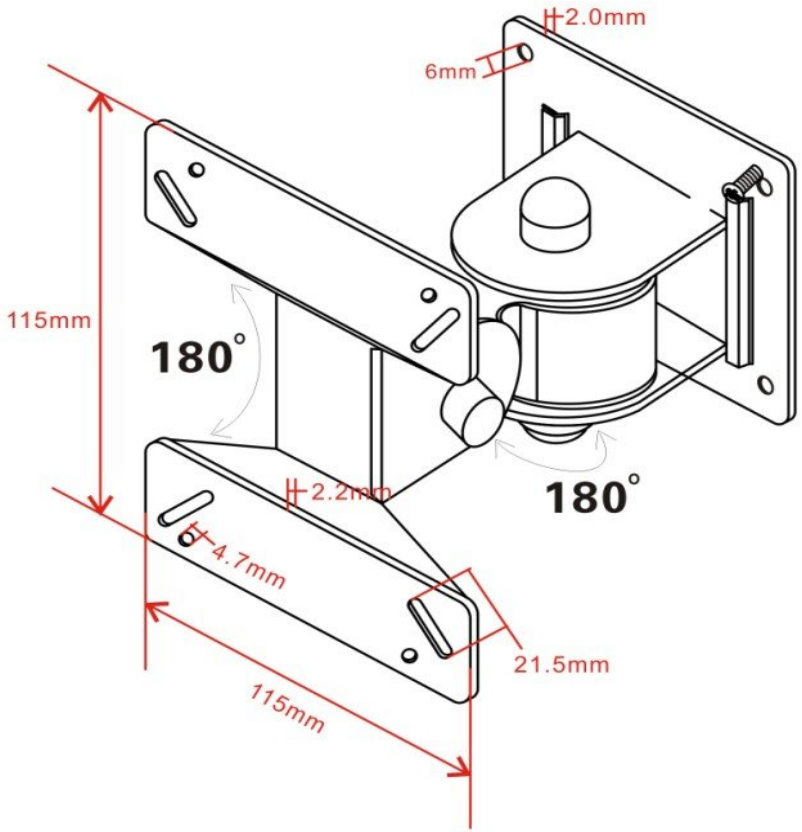

Meet the VESA standard 75mm and 100mm pitch

Applies to: 14 "-21"
Adjustable LCD display to a right angle
Bearing weight: 15Kg
Adjustment Angle: 180 degrees from top to bottom; about 180 degrees
Material: cold rolled plate
Thickness: 2mm